ISOMETER® iso685-...-B

Insulation monitoring device for unearthed AC, AC/DC and DC systems (IT systems)

iso685-x-B_D00177_07_D_XXEN/03.2021

ISOMETER® iso685-…-B

Insulation monitoring device for unearthed AC, AC/DC and DC systems (IT systems)

ISOMETER® iso685-D-B

Device features

- ISOMETER® for IT AC systems with galvanically connected rectifiers or inverters and for IT DC systems (IT = unearthed systems)
- Automatic adaptation to the existing system leakage capacitance
- Combination of ***AMP***^{Plus} and other profile-specific measurement methods
- Two separately adjustable response value ranges of 1 kΩ…10 MΩ
- High-resolution graphic LC display for excellent readability and recording of the device status
- Connection monitoring (monitoring of the measuring lines)
- Automatic device self test
- Graphical representation of the insulation resistance over time (isoGraph)
- History memory with real-time clock (buffer for three days) for storing 1023 alarm messages with date and time
- Current or voltage output 0(4)…20 mA, 0…400 µA, 0…10 V, 2…10 V (galvanically separated), which is analogous to the measured insulation value of the system
- Freely programmable digital inputs and outputs
- Remote setting via the Internet or Intranet (Webserver/Option: COMTRAXX® Gateway).
- Worldwide remote diagnosis via the Internet
- RS-485/BS (Bender sensor bus) for communication with other Bender devices
- ISOnet: Internal separation of the ISOMETER® from the IT system to be monitored (e.g. if several IT systems are interconnected)
- BCOM, Modbus TCP/RTU and web server
- Voltage expandable via coupling devices

Product description

The ISOMETER® is an insulation monitoring devices in accordance with IEC 61557-8 for IT systems. The devices are universally applicable in AC, 3(N)AC, AC/DC and DC systems. AC systems may include extensive DC-supplied loads (such as rectifiers, inverters, variable-speed drives).

Application

- AC, DC or AC/DC main circuits
- AC/DC main circuits with directly connected DC components, such as rectifiers, converters, variable-speed drives
- UPS systems, battery systems
- Heaters with phase control
- Systems including switch-mode power supplies
- coupled IT systems with high leakage capacitances

Function

The insulation monitoring device continuously monitors the entire insulation resistance of an IT system during operation and triggers an alarm when the value falls below a preset response value. To obtain a measurement the device has to be connected between the IT system (unearthed system) and the protective earth conductor (PE). A measuring current in the µA range is superimposed onto the system which is recorded and evaluated by a microprocessor-controlled measuring circuit. The measuring time is dependent on the selected measurement profiles, the system leakage capacitance, the insulation resistance and possible system-related disturbances.

The response values and other parameters are set using a commissioning wizard as well as via different setup menus using the device buttons and a high-resolution graphical LC display. The selected settings are stored in a permanent fail-safe memory. Different languages can be selected for the setup menus as well as the messages indicated on the display. The device utilises a clock for storing fault messages and events in a history memory with time and date stamp. The settings can be password protected to prevent unauthorised changes.

To ensure proper functioning of connection monitoring, the device requires the setting of the system type 3AC, AC or DC and the required use of the appropriate terminals L1/+, L2, L3/-.

The insulation monitoring device iso685–x–B is able to measure the insulation resistance reliably and precisely in all common IT systems (unearthed systems). Due to various applications, system types, operating conditions, application of variable-speed drives, high system leakage capacitances etc., the measurement technique must be able to meet varying requirements in order to ensure an optimised response time and relative uncertainty. Therefore different measuring profiles can be selected with which the device can optimally adjusted.

If the preset response value falls below the value of Alarm 1 and/or Alarm 2, the associated alarm relays switch, the LEDs ALARM 1 or ALARM 2 light and the measured value is shown on the LC display (in case of insulation faults in DC systems, a trend graph for the faulty conductor L+/L- is displayed). If the fault memory is activated, the fault message will be stored. Pressing the RESET button resets the insulation fault message, provided that the current insulation resistance displayed at the time of resetting is at least 25 % above the actual response value. As additional Information, the quality of the measuring signal and the time required to update the measured value are shown on the display. A poor signal quality (1-2 bars) may be an indication that the wrong measurement profile has been selected.

The ISOMETER® has an internal system isolating switch, which makes it possible to operate several ISOMETER®s in coupled IT systems. For this purpose, the ISOMETER®s are connected via an Ethernet bus. The integrated ISOnet function ensures that only one ISOMETER® is actively measuring at a time, while the other devices are completely isolated from the system and waiting in standby mode for measuring permission.

The ISOMETER® is able to synchronise itself with other ISOMETER®s. This makes it possible to monitor capacitive coupled IT systems without interfering with each other.

AC/DC

Interfaces

- Communication protocol Modbus TCP
- BCOM for Bender device communication via Ethernet
- BS bus for communication of Bender devices (RS-485)
- Integrated web server for reading out measured values and for parameter setting

Device variants

iso685-D-B
This device variant features a high-resolution graphic LC display and operating controls for direct operation of the device functions. It **cannot** be combined with an FP200.

iso685-S-B
This device variant features **neither a display nor operating controls**. It can only be used in combination with the FP200 and it is operated via this front panel.

Option "W"
The ISOMETER®s with and without integrated display are available with option „W“ for extreme climatic and mechanical conditions (ISOMETER® iso685W-D-B and iso685W-S-B).

Measurement method

AMPPlus The iso685-…-B series uses the patented ***AMP***Plus measurement method. This measurement method allows concise monitoring of modern power supply systems, also in case of extensive, directly connected DC components and high system leakage capacitances.

Standards

The ISOMETER® has been developed in compliance with the following standards:

- DIN EN 61557-8 (VDE 0413-8):2015-12
- IEC 61557-8:2014-12
- IEC 61557-8:2014/COR1:2016
- DIN EN 61557-8 Ber 1 (VDE 0413-8 Ber 1):2016-12

Certifications

Operating elements

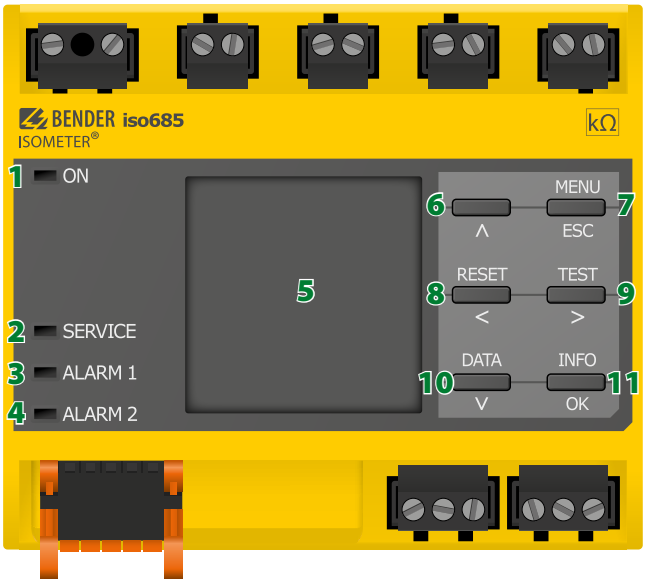

1 -	ON	The LED “ON” lights when the device is turned on.
2 -	SERVICE	The LED “SERVICE” lights when there is either a device fault or a connection fault, or when the device is in maintenance mode.
3 -	ALARM 1	The LED “ALARM 1” lights when the insulation resistance of the IT system falls below the set response value R_{an1}.
4 -	ALARM 2	The LED “ALARM 2” lights when the insulation resistance of the IT system falls below the set response value R_{an2}.
5 -	Display	The device display shows information regarding the device and the measurements.
6 -	∧	Navigates up in a list or increases a value.
7 -	MENU	Opens the device menu
	ESC	Cancels the current process or navigates one step back in the device menu.
8 -	RESET	Resets alarms.
	<	Navigates backwards (e.g. to the previous setting step) or selects a parameter.
9 -	TEST	Starts the device self test.
	>	Navigates forwards (e.g. to the next setting step) or selects a parameter.
10 -	DATA	Indicates data and values.
	∨	Navigates down in a list or reduces a value.
11 -	INFO	Shows information.
	OK	Confirms an action or a selection.

Wiring diagram

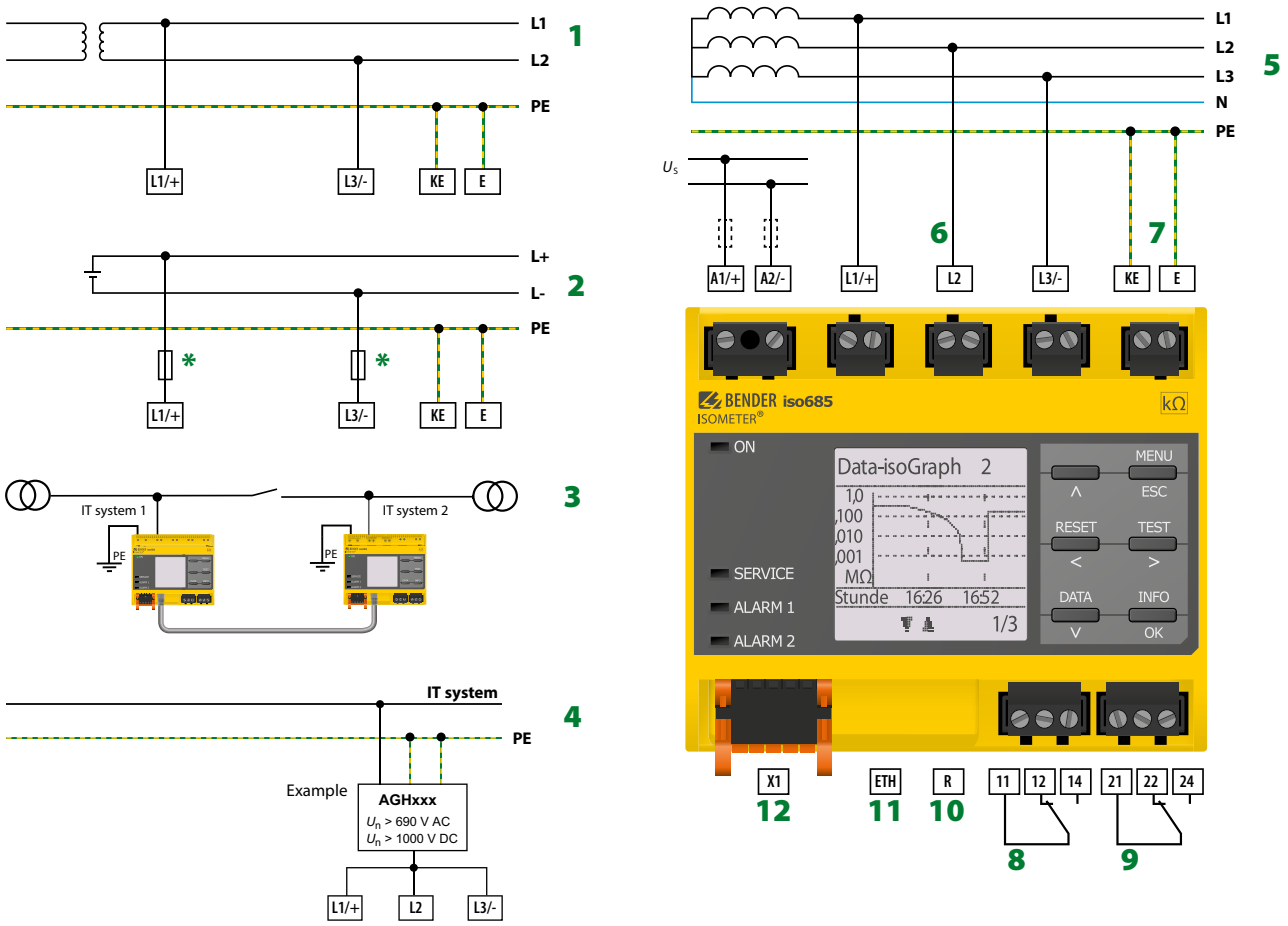

1 - Connection to an AC system U_n

2 - Connection to a DC system U_n

3 - Linked with two IT systems which can be interconnected via a coupling switch. Information regarding the state of the coupling switch is not necessary.

4 - Connection to an IT system with coupling device

5 - Connection to a 3(N)AC system

6 - Connection to the IT system to be monitored (L1/+, L2, L3/-)

7 - Separate connection of KE, E to PE

8 - (K1) Alarm relay 1, available changeover contacts

9 - (K2) Alarm relay 2, available changeover contacts

10 - Switchable resistor R for RS-485 bus termination

11 - Ethernet interface

12 - Digital interface

* - For systems > 690 V and with overvoltage category III a fuse for the connection to the system to be monitored must be provided.

Recommendation: 2A screw-in fuses.

Provide line protection!

According to DIN VDE 0100-430, a line protection shall be provided for the supply voltage.

NOTE

According to DIN VDE 0100-430, devices for protection against a short-circuit can be omitted for the coupling of terminals L1/+, L2 and L3/- to the IT system ≤ 690 V to be monitored if the wiring is carried out in such a manner as to reduce the risk of a short-circuit to a minimum. Ensure short-circuit-proof and earth-fault-proof wiring.

The connecting lines L1/+, L2, L3/- to the system to be monitored must be carried out as spur lines. No load current may be conducted through the terminals.

For UL applications:

Use 60/70°C copper lines only!

UL and CSA application require the supply voltage to be protected via 5 A fuses.

Digital interface X1

Digital interface	Terminal	Colour
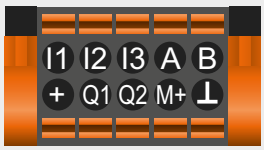 X1	I1	Input 1
	I2	Input 2
	I3	Input 3
	A	RS-485 A
	B	RS-485 B
	+	+24 V
	Q1	Output 1
	Q2	Output 2
	M+	Analogue output
	⊥	Ground

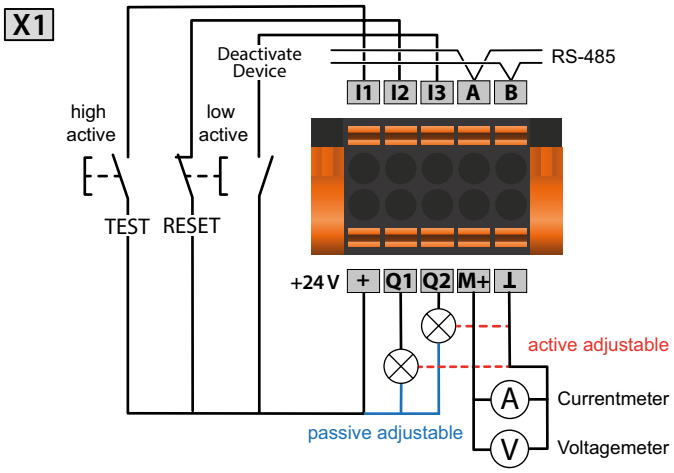

Dimension diagram iso685-…-B

Dimensions in mm

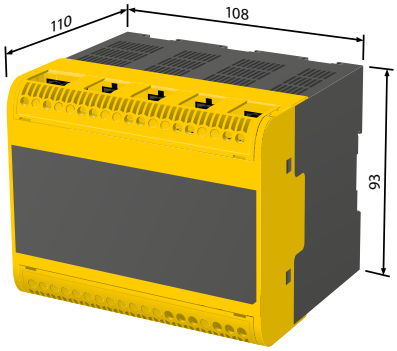

Dimension diagram Panel cut-out FP200

Dimensions in mm

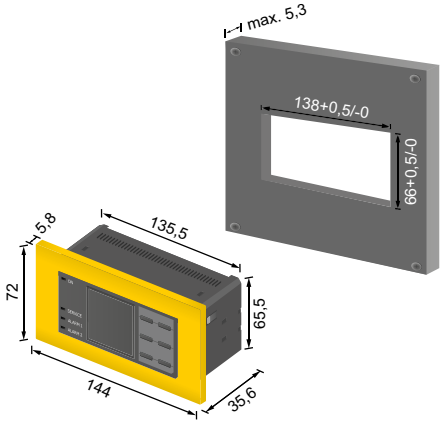

Connection to FP200

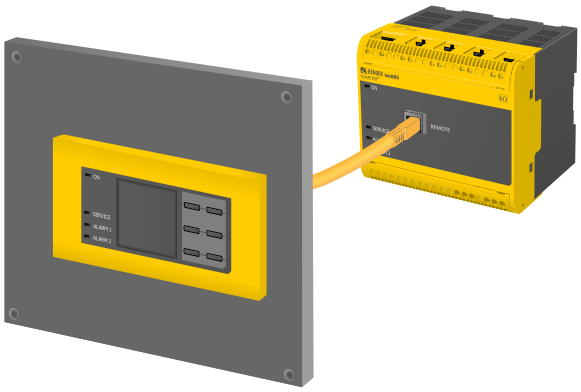

Technical data

Insulation coordination according to IEC 60664-1/IEC 60664-3

Definitions:	
Measuring circuit (IC1)	L1/+, L2, L3/-
Supply circuit (IC2)	A1, A2
Output circuit 1 (IC3)	11, 12, 14
Output circuit 2 (IC4)	21, 22, 24
Control circuit (IC5)	(E, KE), (X1, ETH, X3, X4)
Rated voltage	1000 V
Overvoltage category	III
Rated impulse voltage:	
IC1/(IC2-5)	8 kV
IC2/(IC3-5)	4 kV
IC3/(IC4-5)	4 kV
IC4/IC5	4 kV
Rated insulation voltage:	
IC1/(IC2-5)	1000 V
IC2/(IC3-5)	250 V
IC3/(IC4-5)	250 V
IC4/IC5	250 V
Pollution degree for accessible parts on the outside of the device housing (U_n < 690 V)	3
Pollution degree for accessible parts on the outside of the device housing (U_n >690 < 1000 V)	2
Protective separation (reinforced insulation) between:	
IC1/(IC2-5)	Overvoltage category III, 1000 V
IC2/(IC3-5)	Overvoltage category III, 300 V
IC3/(IC4-5)	Overvoltage category III, 300 V
IC4/IC5	Overvoltage category III, 300 V
Voltage test (routine test) according to IEC 61010-1:	
IC2/(IC3-5)	AC 2,2 kV
IC3/(IC4-5)	AC 2,2 kV
IC4/IC5	AC 2,2 kV

Supply voltage

Supply via A1/+, A2/-:

Supply voltage range U_s	AC/DC 24…240 V
Tolerance of U_s	-30…+15%
Maximum permissible input current of U_s	650 mA
Frequency range of U_s	DC, 50…400 Hz [1]
Tolerance of the frequency range of U_s	-5…+15 %
Power consumption, typically DC	≤ 12 W
Power consumption, typically 50/60 Hz	≤ 12 W/21 VA
Power consumption, typically 400 Hz	≤ 12 W/45 VA

Supply via X1:

Supply voltage U_s	DC 24 V
Tolerance of U_s	DC -20…+25 %

IT system being monitored

Nominal system voltage range U_n	AC 0…690 V DC 0…1000 V AC/DC 0…600 V (for UL applications)
Tolerance of U_n	AC/DC +15 %
Frequency range of U_n	DC, 0.1…460 Hz
Max. AC voltage $U_{\sim}$ in the frequency range f_n = 0.1…4 Hz	$U_{\sim\,max} = 50\ V/Hz^2 * (1 + f_n^2)$

Response values

Response value R_{an1} (alarm 1)	1 kΩ…10 MΩ
Response value R_{an2} (alarm 2)	1 kΩ…10 MΩ
Relative uncertainty (acc. to IEC 61557-8)	profile dependent, ±15 %, at least ±1 kΩ
Hysteresis	25 %, at least 1 kΩ

Time response

Response time t_{an} at R_F = 0.5 x R_{an} (R_{an} = 10 kΩ) and C_e = 1 µF according to IEC 61557-8	profile dependent, typ. 4 s (see diagrams in manual)
Response time DC alarm at C_e = 1 µF	profile dependent, typ. 2 s (see diagram in manual)
Start-up delay $T_{start\text{-}up}$	0…120 s

Measuring circuit

Measuring voltage U_m	profile dependent, ±10 V, ±50 V (see profile overview)
Measuring current I_m	≤ 403 µA
Internal resistance R_i, Z_i	≥ 124 kΩ
Internal resistance on decouppled systems (inactive by I/O, inactive by ISOnet or cut-off)	typ. 50 MΩ
Permissible extraneous DC voltage U_{fg}	≤ 1200 V
Permissible system leakage capacitance C_e	profile dependent, 0…1000 µF

Measuring ranges

Measuring range f_n	0.1…460 Hz
Tolerance measurement of f_n	±1 % ±0.1 Hz
Voltage range measurement of f_n	AC 25…690 V
Measuring range U_n	AC 25…690 V DC 0…1000 V
Voltage range measurement of U_n	AC/DC > 10 V
Tolerance measurement of U_n	±5 % ±5 V
Measuring range C_e	0…1000 µF
Tolerance measurement of C_e	±10 % ±10 µF
Frequency range measurement of C_e	DC, 30…460 Hz
Min. insulation resistance measurement of C_e	depending on the profile and coupling mode, typ. > 10 kΩ

Display

Indication	graphic display 127 x 127 pixels, 40 x 40 mm [2]
Display range measured value	0.1 kΩ…20 MΩ
Operating uncertainty (according to IEC 61557-8)	±15 %, at least ±1 kΩ

LEDs

ON (operation LED)	green
SERVICE	yellow
ALARM 1	yellow
ALARM 2	yellow

In-/Outputs (X1-Interface)

Cable length X1 (unshielded cable)	≤ 10 m
Cable length X1 (shielded cable, shield connected to earth (PE) on one end, recommended: J-Y(St)Y min. 2x0,8)	≤ 100 m
Total max. supply output current for each output (device supplied by X1.+/X1.GND)	max. 1 A
Total max. supply output current on X1 (device supplied by A1+/A2-)	max. 200 mA
Total max. supply output current on X1 (device supplied by A1+/A2- between 16,8 V and 40 V)	$I_{LmaxX1} = 10\ mA + 7\ mA/V * U_s$ [3] (negative values are not allowed for I_{LmaxX1})

Digital Inputs (I1, I2, I3)

Number	3
Operating mode, adjustable	active high, active low
Functions	off, test, reset, deactivate device, start initial measurement
Voltage	Low DC -3…5 V, High DC 11…32 V
Tolerance Voltage	±10 %

Digital Outputs (Q1, Q2)

Number	2
Operating mode, adjustable	active, passive
Functions	off, Ins. alarm 1, Ins. alarm 2, connection fault, DC- alarm [4], DC+ alarm [4], symmetrical alarm, device fault, common alarm, measurement complete, device inactive, DC offset alarm
Voltage	passive DC 0…32 V, active DC 0/19.2…32 V

Analogue Output (M+)

Number	1
Operating mode	linear, midscale point 28 kΩ/120 kΩ
Functions	insulation value, DC offset
Current	0…20 mA (< 600 Ω), 4…20 mA (< 600 Ω), 0…400 µA (< 4 kΩ)
Voltage	0…10 V (> 1 kΩ), 2…10 V (> 1 kΩ)
Tolerance related to the current/voltage final value	±20 %

Technical data (continued)

Interfaces

Field bus:	
Interface/protocol	web server/Modbus TCP/BCOM
Data rate	10/100 Mbit/s, autodetect
Max. amount Modbus requests	< 100/s
Cable length	≤ 100 m
Connection	RJ45
IP address	DHCP/manual 192.168.0.5
Network mask	255.255.255.0
BCOM address	system-1-0
Function	communication interface
ISOnet:	
Number ISOnet devices	≤ 20
Max. nominal system voltage range ISOnet	AC 690 V; DC 1000 V
Sensor bus:	
Interface/protocol	RS-485/BS/Modbus RTU
Data rate	9.6 kBaud/s
Cable length	≤ 1200 m
Cable: twisted pair, one end of shield connected to PE	recommended: J-Y(St)Y min. 2x0.8
Connection	terminals X1.A, X1.B
Terminating resistor at the beginning and at the end of the transmission path	120 Ω, can be connected internally
Device address, BS bus	1…90

Switching elements

Number of switching elements	2 changeover contacts
Operating mode	N/C operation/N/O operation
Contact 11-12-14/21-22-24	off, Ins. alarm 1, Ins. alarm 2, connection fault, DC- alarm [4], DC+ alarm [4], symmetrical alarm, device fault, common alarm, measurement complete, device inactive, DC offset alarm
Electrical endurance under rated operating conditions, number of cycles	10.000

Contact data acc. to IEC 60947-5-1:

Utilisation category	AC-13	AC-14	DC-12	DC-12	DC-12	DC-12
Rated operational voltage	230 V	230 V	24 V	48 V	110 V	220 V
Rated operational current	5 A	3 A	1 A	1 A	0.2 A	0.1 A
Rated insulation voltage ≤ 2000 m NN						250 V
Rated insulation voltage ≤ 3000 m NN						160 V
Minimum contact rating						1 mA at AC/DC ≥ 10 V

Environment/EMC

EMC	IEC 61326-2-4 [5]
Ambient temperatures:	
Operating temperature	-25…+55 °C
Transport	-40…+85 °C
Long-term storage	-40…+70 °C
Classification of climatic conditions acc. to IEC 60721:	
Stationary use (IEC 60721-3-3)	3K23 (except condensation and formation of ice)
Transport (IEC 60721-3-2)	2K11
Long-term storage (IEC 60721-3-1)	1K22
Classification of mechanical conditions acc. to IEC 60721:	
Stationary use (IEC 60721-3-3)	3M11
Transport (IEC 60721-3-2)	2M4
Long-term storage (IEC 60721-3-1)	1M12
Area of application	≤ 3000 m NN

Connection

Connection type	pluggable screw-type terminal or push-wire terminal
Screw-type terminals:	
Nominal current	≤ 10 A
Tightening torque	0.5…0.6 Nm (5…7 lb-in)
Conductor sizes	AWG 24-12
Stripping length	7 mm
rigid/flexible	0.2…2.5 mm²
flexible with ferrules, with/without plastic sleeve	0.25…2.5 mm²
Multiple conductor, rigid	0.2…1 mm²
Multiple conductor, flexible	0.2…1.5 mm²
Multiple conductor, flexible with ferrule without plastic sleeve	0.25…1 mm²
Multiple conductor, flexible with TWIN ferrule with plastic sleeve	0.5…1.5 mm²
Push-wire terminals:	
Nominal current	≤ 10 A
Conductor sizes	AWG 24-12
Stripping length	10 mm
rigid/flexible	0.2…2.5 mm²
flexible with ferrules, with/without plastic sleeve	0.25…2.5 mm²
Multiple conductor, flexible with TWIN ferrule with plastic sleeve	0.5…1.5 mm²
Push-wire terminals X1:	
Nominal current	≤ 8 A
Conductor sizes	AWG 24-16
Stripping length	10 mm
rigid/flexible	0.2…1.5 mm²
flexible with ferrule without plastic sleeve	0.25…1.5 mm²
flexible with TWIN ferrule with plastic sleeve	0.25…0.75 mm²

Other

Operating mode	continuous operation
Mounting (0°)	display oriented, cooling slots must be ventilated vertically [6]
Degree of protection internal components	IP40
Degree of protection terminals	IP20
DIN rail mounting acc. to	IEC 60715
Screw fixing	3 x M4 with mounting clip
Enclosure material	polycarbonate
Flammability class	V-0
ANSI code	64
Dimensions (W x H x D	108 x 93 x 110 mm
Weight	< 390 g

Option „W“ data different from the standard version

Rated operational current of switching elements	max. 3 A (for UL applications)
Ambient temperatures:	
Operating temperature	-40…+70 °C -40…+65 °C (for UL applications)
Transport	-40…+85 °C
Long-term storage	-40…+70 °C
Classification of climatic conditions acc. to IEC 60721:	
Stationary use (IEC 60721-3-3)	3K23 (condensation and formation of ice possible)
Classification of mechanical conditions acc. to IEC 60721:	
Stationary use (IEC 60721-3-3)	3M12

[1] At a frequency > 200 Hz, the connection of X1 must be insulated. Only permanently installed devices which at least have overvoltage category CAT2 (300V) may be connected.

[2] Indication limited outside the temperature range -25…+55 °C.

[3] U_s [Volt] = supply voltage ISOMETER®

[4] For U_n ≥ 50 V only.

[5] This is a class A product. In a domestic environment, this product may cause radio interference. In this case, the user may be required to take corrective actions.

[6] Recommendation: Devices mounted at 0 ° (display-oriented, cooling slots must be ventilated vertically).

For devices mounted at an angle of 45°, the max. working temperature is reduced by 10 °C.
For devices mounted at an angle of 90°, the max. working temperature is reduced by 20 °C.

Ordering information

Nominal system voltage range U_n		Supply voltage U_s		Display	Option W	Type		Art. No.
AC	DC	AC	DC					
0…690 V; 0.1…460 Hz	0…1000 V	24…240 V; 50…400 Hz	24…240 V	integrated	–	iso685-D-B		B91067020
					-40…+70 °C, 3K23, 3M12	iso685W-D-B		B91067020W
				detached	–	iso685-S-B + FP200		B91067220
					-40…+70 °C, 3K23, 3M12	iso685W-S-B + FP200W		B91067220W

Accessories

Description	Art. No.
A set of screw terminals[1]	B91067901
A set of push-wire terminals	B91067902
Enclosure accessories (terminal cover, 2 mounting clips) [1]	B91067903
Transparent cover 144x72 (IP65) for FP200 [2]	B98060005

[1] included in the scope of delivery

[2] If the "transparent front cover 144x72 (IP65)" is used, the cutout in the control cabinet must be increased in height from 66 mm to 68 mm (+ 0.7 / -0 mm).

Suitable system components

Description	Type	Art. No.
Device version without display	iso685-S-B	B91067120
	iso685W-S-B	B91067120W
Display for front panel mounting	FP200	B91067904
	FP200W	B91067904W
Coupling devices	AGH150W-4	B98018006
	AGH204S-4	B914013
	AGH520S	B913033
	AGH676S-4	B913055

Suitable measuring instruments on request!

Bender GmbH & Co. KG
Londorfer Straße 65 • 35305 Grünberg • Germany
Tel.: +49 6401 807-0 • info@bender.de • www.bender.de

BENDER Group